OXIDATION-REDUCTIONS REACTIONS

Chapter 19… (From next years new book)

ELECTROCHEMICAL REACTIONS:

What are electrochemical reactions?

Electrons are transferred from one species to another

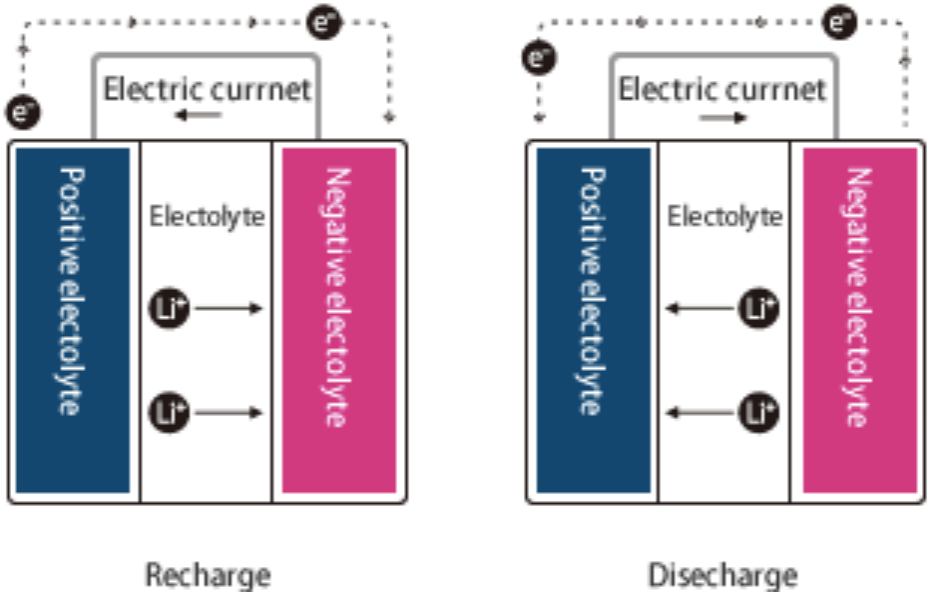

ACTIVATING PRIOR KNOWLEDGE (TO REVIEW FOR FINALS…):

-Oxidation Numbers (Ion charges)

-Balancing Equations

-Electronegativity

-Activity Series (how strong are the ions)

OXIDATION/REDUCTION:

What is an oxidation number?

The ionic charge on a species

What happens when something is oxidized?

Electrons are lost

… when it is reduced?

Electrons are gained

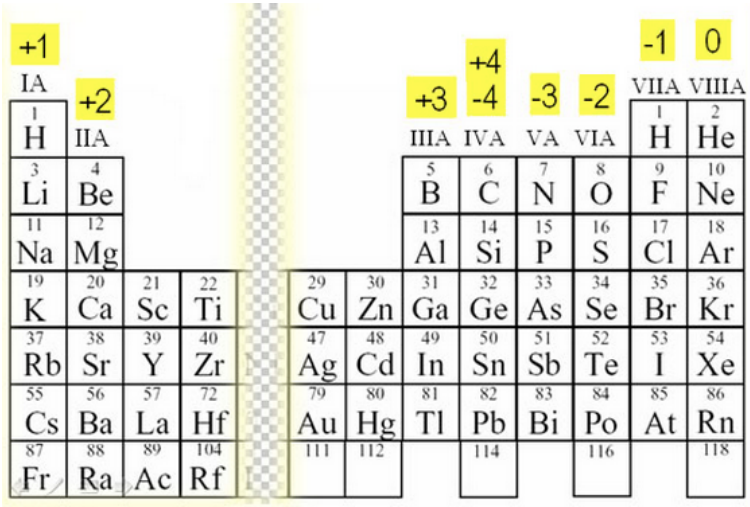

OIL RIG

ASSIGNING OXIDATION NUMBERS:

Rule #1: The oxidation number of any pure element is _0_.

Na (s) = _0_

Cl_2 (g) = _0_

Rule #2: The oxidation number of a monatomic ion _Is the charge shown_ on the ion.

Na^+ (aq) = +1

Cl^- (aq) = _-1_

ASSIGNING OXIDATION NUMBERS:

Rule #3: The more electronegative element in a binary compound is assigned the number equal to the charge it would have if it were an ion.

NaCl (s) = Cl = -1

NO (g) = O = -2

ASSIGNING OXIDATION NUMBERS:

Rule #4: The oxidation number of fluorine in a compound is always ___-1___.

LiF = -1

Rule #5: Oxygen has an oxidation number of -2, unless it is combined with F, in which it is +1 or +2, or it is in a peroxide, in which it is -1.

NO_2 = -2

ASSIGNING OXIDATION NUMBERS:

Rule #6: Hydrogen's oxidation state in most of its compounds is _____+1_____, but if it is combined with a positive metal then it is _____-1_____.

MgH_2 = -1

HCl = +1

Rule #7: In compounds, Group 1 and 2 elements and aluminum have oxidation numbers of _____+1_____, _____+2_____, and _____+3_____. *Matches the periodic table trends.*

$CaCO_3$ (aq) = +2

ASSIGNING OXIDATION NUMBERS:

Rule #8: The sum of the oxidation numbers of all atoms in a neutral compound is 0.

NO_2 = ___

$CaCO_3$ = ___

Rule #9: The sum of the oxidation numbers of all atoms in a polyatomic ion equals the charge of the ion.

$H_2PO_4^-$ (aq) = __

EXAMPLE PROBLEM #1:

Label the elements with their respective oxidation numbers:

1. Br_2
2. KNO_3
3. NO_3^-
4. SO_3
5. H_2SO_4

RECOGNIZING OXIDATION-REDUCTION:

Looking at the following reaction, let's assign oxidation numbers to all of the elements:

$$Zn\ (s) + 2\ H^{+}\ (aq) \rightarrow Zn^{2+}\ (aq) + H_2\ (g)$$

Which compound was oxidized (lost electrons)?

Zinc

Which compound was reduced (gained electrons)?

Hydrogen

EXAMPLE PROBLEM #2:

Looking at the following reaction, let's assign oxidation numbers to all of the elements:

Mr. Thompson is my hero

$$Cu\ (s) + HNO_3\ (aq) \rightarrow Cu(NO_3)_2\ (s) + NO\ (g) + H_2O\ (l)$$

Which compound was oxidized (lost electrons)?

Copper

Which compound was reduced (gained electrons)?

Nitrogen

BALANCING REDOX REACTIONS:

Let's work through this example problem to demonstrate the steps to balancing a redox reaction:

$$NaBr + Cl_2 \rightarrow NaCl + Br_2$$

Step 1: Identify the reducing agent and the oxidizing agent.

BALANCING REDOX REACTIONS:

Let's work through this example problem to demonstrate the steps to balancing a redox reaction:

$$NaBr + Cl_2 \rightarrow NaCl + Br_2$$

Step 2: Write the half-reactions for the reducing and oxidizing agents.

BALANCING REDOX REACTIONS:

Let's work through this example problem to demonstrate the steps to balancing a redox reaction:

$$NaBr + Cl_2 \rightarrow NaCl + Br_2$$

Step 3: Balance the atoms in the half reactions just like we did all year. If you need to balance oxygen use H_2O and add H^+ to the opposite side.

BALANCING REDOX REACTIONS:

Let's work through this example problem to demonstrate the steps to balancing a redox reaction:

$$NaBr + Cl_2 \rightarrow NaCl + Br_2$$

Step 4: Balance the charges on both sides by using e^-.

BALANCING REDOX REACTIONS:

Let's work through this example problem to demonstrate the steps to balancing a redox reaction:

$$NaBr + Cl_2 \rightarrow NaCl + Br_2$$

Step 5: Identify the ratio of electrons. If 1:1 then no multiplying is needed. If 1:2 or 1:3 and so on then you must multiply.

BALANCING REDOX REACTIONS:

Let's work through this example problem to demonstrate the steps to balancing a redox reaction:

$$NaBr + Cl_2 \rightarrow NaCl + Br_2$$

Step 6: Combine the two half-reactions to get one equation. Cross out things that are similar on both sides. Double check everything is balanced.

EXAMPLE PROBLEM #3: BALANCING REDOX REACTIONS

Balance the following redox reaction:

$$Fe_2O_3 + CO \rightarrow Fe + CO_2$$

Steps:

1. Identify the reducing agent and the oxidizing agent.
2. Write the half-reactions.
3. Balance the atoms in the half reactions. Add H2O if you need to balance oxygens. Add H+ to balance the side without hydrogen.
4. Balance the charges on both sides by using e-.
5. Identify the ratio of electrons. Multiply if needed to get electrons equal.
6. Combine two half-reactions to one equation.

GALVANIC OR VOLTAIC CELLS:

What is special about ionic compounds in H_2O?

Electric current can flow through an aqueous solution of ions

What is happening during redox reactions?

Transfer of electrons

PARTS OF VOLTAIC CELL:

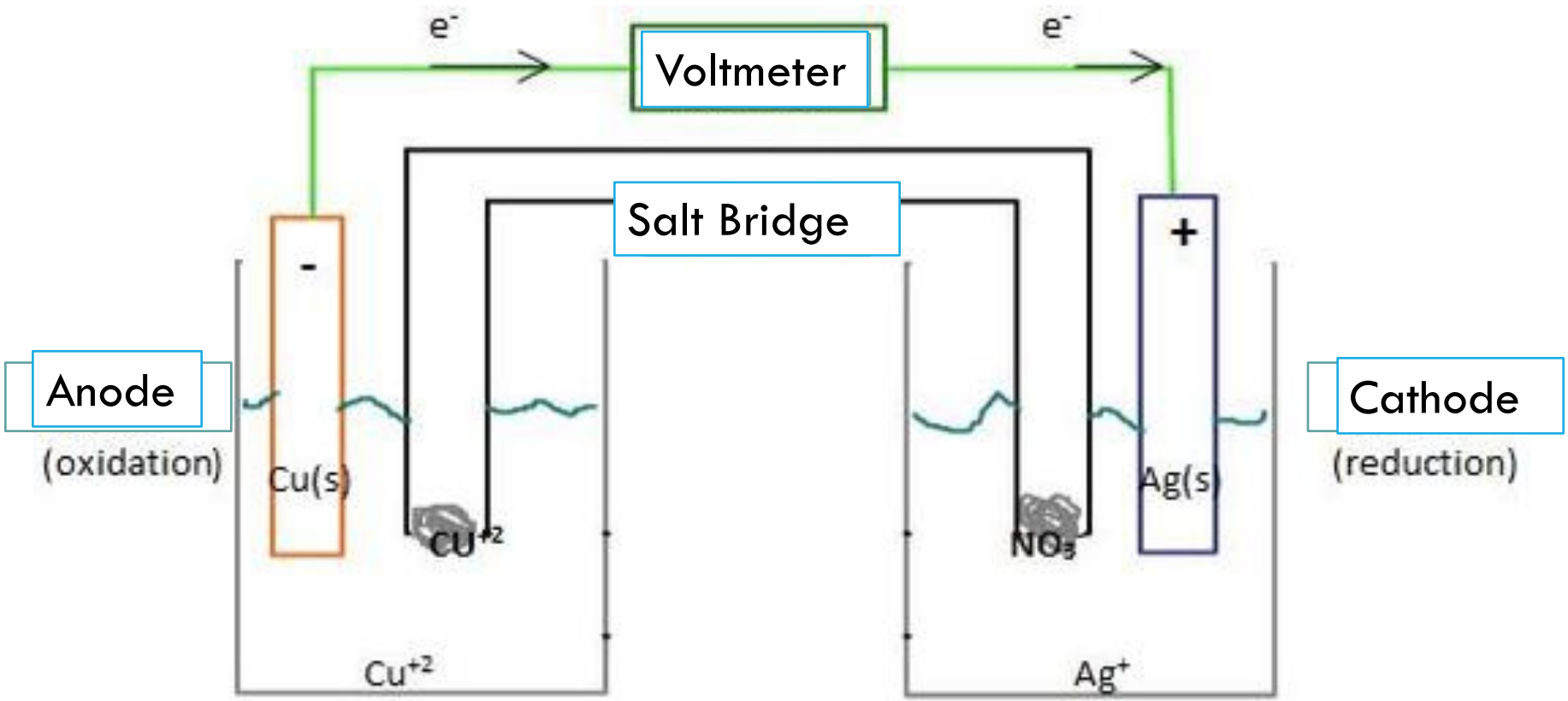

VOLTAIC CELLS:

Describe the process by which voltaic cells create current:

1. Electrons leave the anode and flow through wire to the cathode.

2. As the electrons leave the anode, the cations formed dissolve into the solution in the anode compartment.

3. As electrons reach the cathode, cations are attached to the cathode.

4. The cations take electrons and silver gets deposited.

ELECTROMOTIVE FORCE (EMF)

How is electron flow like a waterfall?

Just like water can only flow in one direction so can electrons

What is emf?

The potential energy difference between the cathode and the anode.

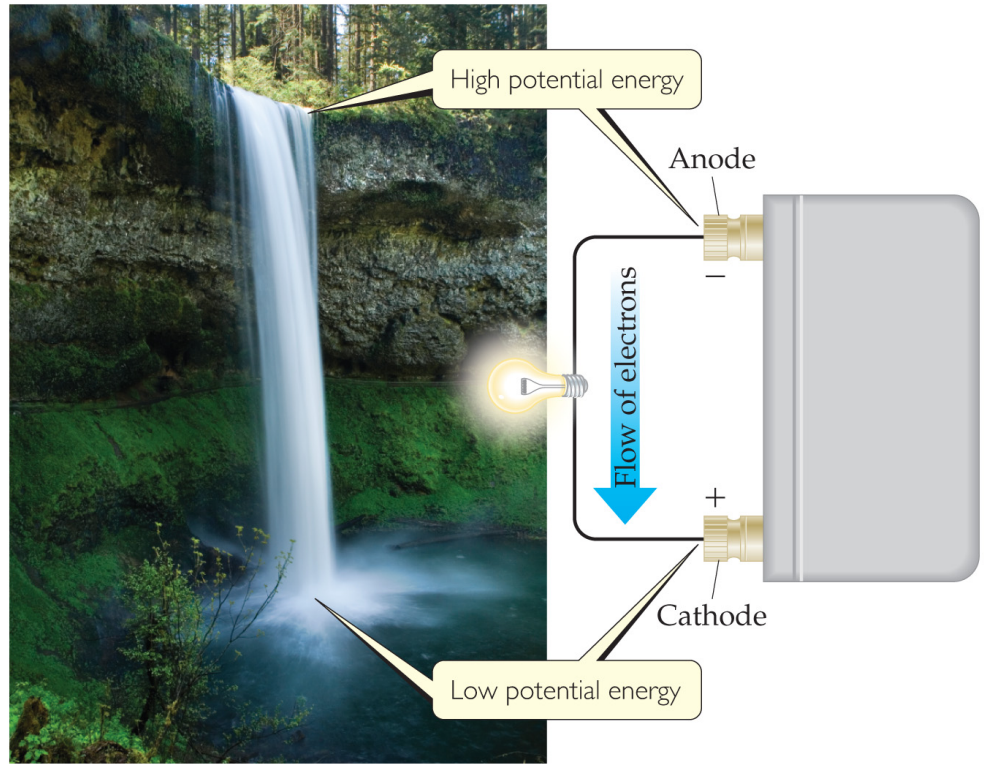

CELL POTENTIAL:

Emf is the same as _____

_____ Cell potential _____.

How is cell potential measured?

In Volts

1V = 1 J/Cc

How do you calculate cell potential ($E°_{cell}$)?

TABLE 20.1 • Standard Reduction Potentials in Water at 25 °C

E°_{red} (V)	Reduction Half-Reaction
+2.87	$F_2(g) + 2e^- \longrightarrow 2F^-(aq)$
+1.51	$MnO_4^-(aq) + 8H^+(aq) + 5e^- \longrightarrow Mn^{2+}(aq) + 4H_2O(l)$
+1.36	$Cl_2(g) + 2e^- \longrightarrow 2Cl^-(aq)$
+1.33	$Cr_2O_7^{2-}(aq) + 14H^+(aq) + 6e^- \longrightarrow 2Cr^{3+}(aq) + 7H_2O(l)$
+1.23	$O_2(g) + 4H^+(aq) + 4e^- \longrightarrow 2H_2O(l)$
+1.06	$Br_2(l) + 2e^- \longrightarrow 2Br^-(aq)$
+0.96	$NO_3^-(aq) + 4H^+(aq) + 3e^- \longrightarrow NO(g) + 2H_2O(l)$
+0.80	$Ag^+(aq) + e^- \longrightarrow Ag(s)$
+0.77	$Fe^{3+}(aq) + e^- \longrightarrow Fe^{2+}(aq)$
+0.68	$O_2(g) + 2H^+(aq) + 2e^- \longrightarrow H_2O_2(aq)$
+0.59	$MnO_4^-(aq) + 2H_2O(l) + 3e^- \longrightarrow MnO_2(s) + 4OH^-(aq)$
+0.54	$I_2(s) + 2e^- \longrightarrow 2I^-(aq)$
+0.40	$O_2(g) + 2H_2O(l) + 4e^- \longrightarrow 4OH^-(aq)$
+0.34	$Cu^{2+}(aq) + 2e^- \longrightarrow Cu(s)$
0 [defined]	$2H^+(aq) + 2e^- \longrightarrow H_2(g)$
−0.28	$Ni^{2+}(aq) + 2e^- \longrightarrow Ni(s)$
−0.44	$Fe^{2+}(aq) + 2e^- \longrightarrow Fe(s)$
−0.76	$Zn^{2+}(aq) + 2e^- \longrightarrow Zn(s)$
−0.83	$2H_2O(l) + 2e^- \longrightarrow H_2(g) + 2OH^-(aq)$
−1.66	$Al^{3+}(aq) + 3e^- \longrightarrow Al(s)$
−2.71	$Na^+(aq) + e^- \longrightarrow Na(s)$
−3.05	$Li^+(aq) + e^- \longrightarrow Li(s)$

$$E^0_{cell} = E^0_{red}(cathode) - E^0_{red}(anode)$$

TABLE 17.1 Standard Reduction Potentials at 25 °C

	Reduction Half-Reaction		$E°$ (V)	
Stronger oxidizing agent	$F_2(g) + 2e^-$	$\longrightarrow 2F^-(aq)$	2.87	Weaker reducing agent
	$H_2O_2(aq) + 2H^+(aq) + 2e^-$	$\longrightarrow 2H_2O(l)$	1.78	
	$MnO_4^-(aq) + 8H^+(aq) + 5e^-$	$\longrightarrow Mn^{2+}(aq) + 4H_2O(l)$	1.51	
	$Cl_2(g) + 2e^-$	$\longrightarrow 2Cl^-(aq)$	1.36	
	$Cr_2O_7^{2-}(aq) + 14H^+(aq) + 6e^-$	$\longrightarrow 2Cr^{3+}(aq) + 7H_2O(l)$	1.33	
	$O_2(g) + 4H^+(aq) + 4e^-$	$\longrightarrow 2H_2O(l)$	1.23	
	$Br_2(aq) + 2e^-$	$\longrightarrow 2Br^-(aq)$	1.09	
	$Ag^+(aq) + e^-$	$\longrightarrow Ag(s)$	0.80	
	$Fe^{3+}(aq) + e^-$	$\longrightarrow Fe^{2+}(aq)$	0.77	
	$O_2(g) + 2H^+(aq) + 2e^-$	$\longrightarrow H_2O_2(aq)$	0.70	
	$I_2(s) + 2e^-$	$\longrightarrow 2I^-(aq)$	0.54	
	$O_2(g) + 2H_2O(l) + 4e^-$	$\longrightarrow 4OH^-(aq)$	0.40	
	$Cu^{2+}(aq) + 2e^-$	$\longrightarrow Cu(s)$	0.34	
	$Sn^{4+}(aq) + 2e^-$	$\longrightarrow Sn^{2+}(aq)$	0.15	
	$2H^+(aq) + 2e^-$	$\longrightarrow H_2(g)$	0	
	$Pb^{2+}(aq) + 2e^-$	$\longrightarrow Pb(s)$	- 0.13	
	$Ni^{2+}(aq) + 2e^-$	$\longrightarrow Ni(s)$	- 0.26	
	$Cd^{2+}(aq) + 2e^-$	$\longrightarrow Cd(s)$	- 0.40	
	$Fe^{2+}(aq) + 2e^-$	$\longrightarrow Fe(s)$	- 0.45	
	$Zn^{2+}(aq) + 2e^-$	$\longrightarrow Zn(s)$	- 0.76	
	$2H_2O(l) + 2e^-$	$\longrightarrow H_2(g) + 2OH^-(aq)$	- 0.83	
	$Al^{3+}(aq) + 3e^-$	$\longrightarrow Al(s)$	- 1.66	
	$Mg^{2+}(aq) + 2e^-$	$\longrightarrow Mg(s)$	- 2.37	
	$Na^+(aq) + e^-$	$\longrightarrow Na(s)$	- 2.71	
Weaker oxidizing agent	$Li^+(aq) + e^-$	$\longrightarrow Li(s)$	- 3.04	Stronger reducing agent

Table 17-1 Chemistry, 5/e

TRY THIS…

A voltaic cell consists of a Mg electrode in 1.0 M $Mg(NO_3)_2$ solution and a Ag electrode in a 1.0 M $AgNO_3$ solution. Calculate the standard *emf* or cell potential at 298 K.

$$E^0_{cell} = E^0_{red}(cathode) - E^0_{red}(anode)$$

IMPORTANCE OF REDOX REACTIONS:

Why are redox reactions important to our everyday life?

Batteries and Hydrogen fuel cells